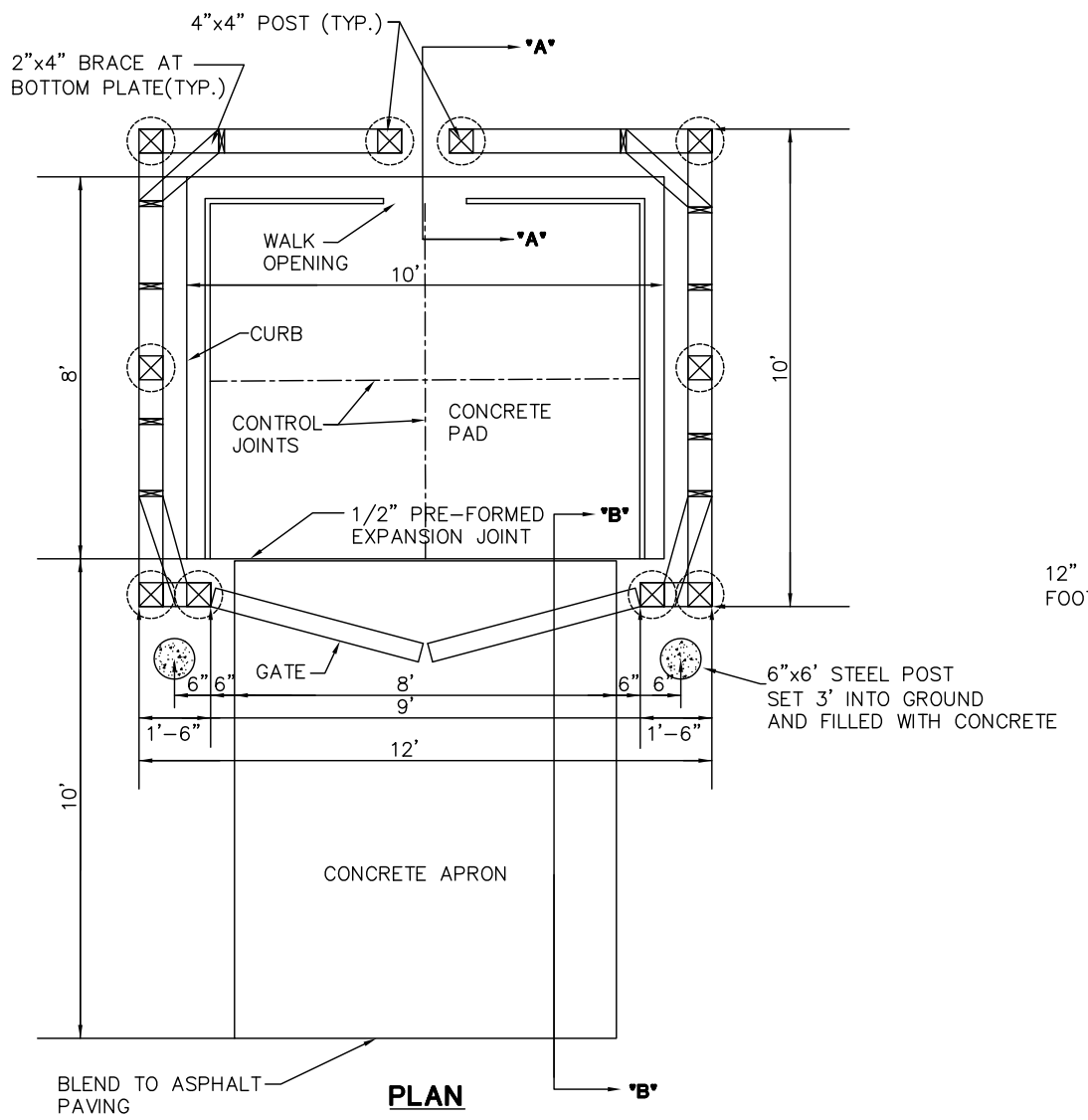

PLAN

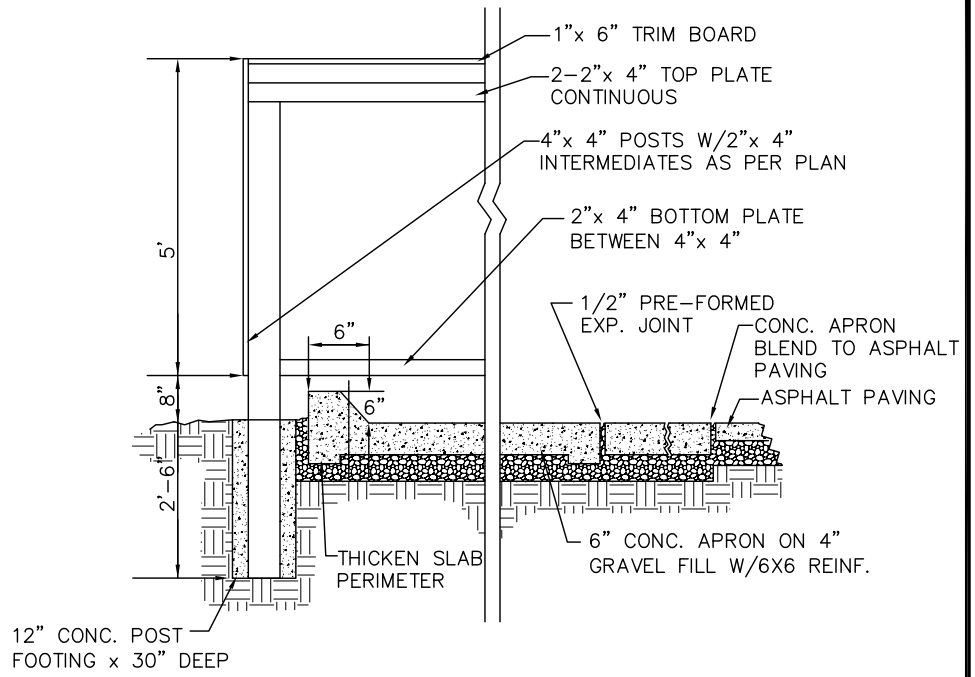

"A-A" **"B-B"**

SECTION

TRASH ENCLOSURE

NOTES:

A. TRASH CONTAINER TO BE A MAX. OF 2 C.Y. CAPACITY.

B. CONTAINER SHALL BE SECURED.

C. PLANS TO BE COMPLIED WITH UNLESS OTHERWISE APPROVED.

D. ALL DUMPSTERS SHALL BE PROVIDED WITH A DUMPSTER PAD AND A MINIMUM THREE-SIDED 6-FOOT HIGH ENCLOSURE WHICH RESTRICTS THE VIEW OF THE DUMPSTER'S OR DUMPSTERS' CONTAINER ON SITE. A 6 FOOT (MINIMUM) HIGH GATE TO BE INSTALLED ON THE FOURTH SIDE OF ENCLOSURE. GATE TO BE LOCKABLE.

E. SEE ZONING CODE FOR PROPER SET BACKS FROM PROPERTY LINE.

CITY OF SIDNEY	SANITATION ENCLOSURE DETAIL	REVISIONS: 10-12-09	DATE APPROVED: FEB. 2002
			PAGE No. 500-6