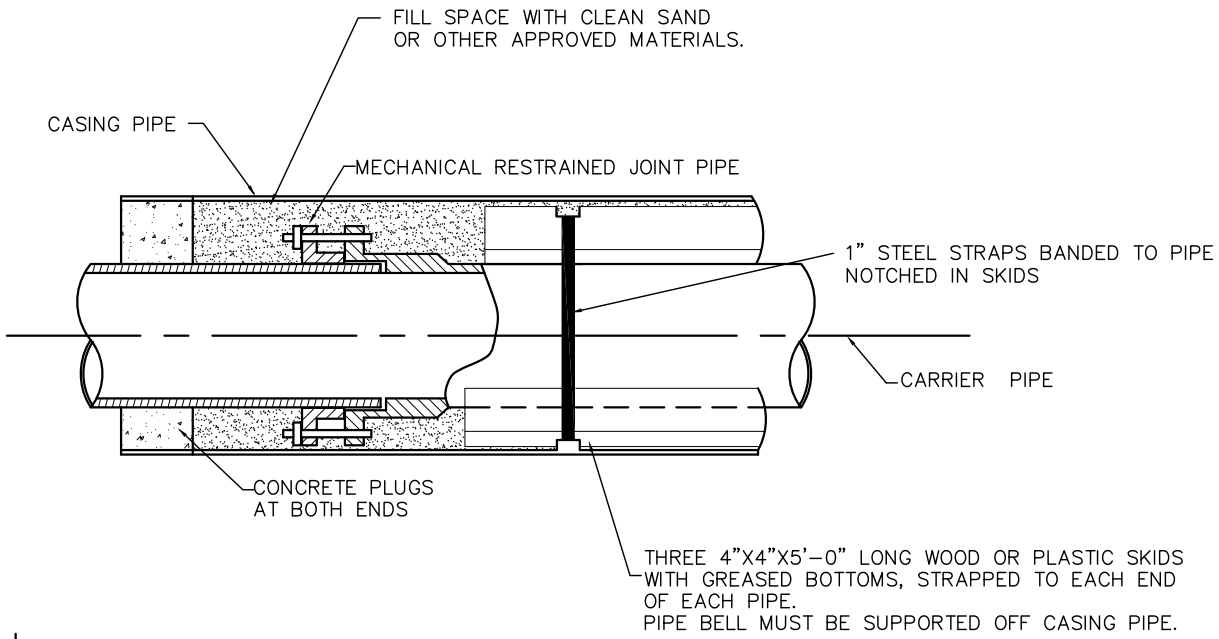

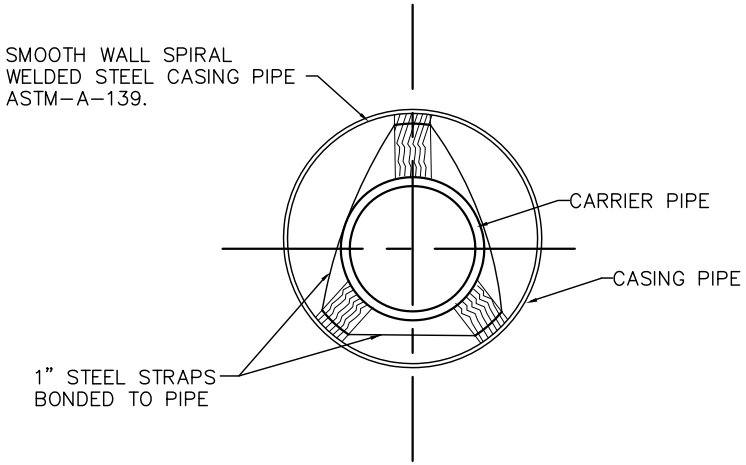

CITY OF SIDNEY	CASING PIPE DETAIL	REVISIONS:	DATE APPROVED: FEB. 2002
			PAGE No. 500-4